2011 IEEE International Conference on Robotics and Automation
Shanghai International Conference Center
May 9-13, 2011, Shanghai, China

On the Controller effect in Closed-Loop Identification for DC Servomechanisms under PD control

R. Miranda[(1)], R. Garrido[(2)] and M. B. Ortiz-Moctezuma[(1)]

Abstract— **This paper adresses the effect that a controller has on the parameter estimates for a closed-loop identification methodology with a DC servomechanism. Closed-loop identification is performed with a direct method, where a PD controller, which stabilizes the system without knowledge about its parameters, closes the loop. It is shown that when the perturbation signal is absent, exponential convergence can be claimed, making the identification algorithm robust. However, when there exists a perturbation signal it can be established a region where the parameter estimates belong to, and it is shown how this region is affected by the PD controller gains.**

I. INTRODUCTION

Servomechanisms are fundamental in modern Robotic and Mechatronic systems where high speed and high precision are of prime importance. In most industrial controllers, Proportional Integral Derivative (PID) algorithms are the choice for closing the loop when the variable of interest is the servomechanism position [3]. In order to apply model-based tuning methods it is necessary to perform an identification algorithm on the servomechanism. It is important to note that if the variable of interest is servo position, then, a linear model of a servomechanism contains a pole on the imaginary axis, thus making the system not BIBO stable, i.e., a bounded input applied to the servomechanism would not produce a bounded position. Therefore, for security reasons, parameter identification should be performed in closed loop. References [5], [6], [7], [8] propose methods for closed loop identification of position-controlled servos where the loop is closed using a linear controller. The approach proposed in [8] uses a PD controller to close the loop and an on-line gradient algorithm allows estimating a linear model of a servomechanism. Relay-based techniques are widespread for servo identification [9], [10]. The idea behind these methods is to close the loop through a relay in order to obtain a sustained oscillation. Then, its amplitude and frequency allows identifying linear model and non linear models of a servomechanism.

Nearly all of the identification procedures using a linear controller [5], [6], [7] fall into the category of direct methods [11], i.e., the parameter identification procedure is applied without regard about the controller being used to close the loop. Moreover, most of the parameter identification techniques use Least Squares methods, which would give incorrect estimates if the disturbances affecting the servo have not zero mean. On the other hand, the relay-based methods give consistent results but tuning of the relay controller can be cumbersome. Besides, no one of the reviewed methods takes explicitly into account disturbances affecting the servomechanism.

This work presents an identification methodology for a perturbed position-controlled servomechanism. A PD controller closes the loop and achieves stability without knowledge about the servomechanism parameters. Theoretical results show that when the perturbation signal is identically zero, exponential convergence can be claimed, and in the presence of a bounded perturbation signal a region Ω_δ can be found where the estimated parameters belong to, which can be made arbitrarily small if a high gain controller is employed. Some simulations depict the behavior of such a region, showing the effect that the controller has on the estimated parameters. The paper is organized as follows. Section II is devoted to present preliminary theoretical results of parameter estimation and passivity based control. In Section III a general description of the disturbed model to be identified is presented. In Section IV the non perturbed case for the identification algorithm is considered, making enphasis in the exponential convergence of all the signals involved, specially those correponding to the parameter convergence. In Section V the perturbed case for closed-loop identification is introduced. Finally, Section VI presents the analysis of the results and Section VII gives some concluding remarks.

II. PRELIMINARY RESULTS

Through the presentation for the closed-loop parameter identification analysis proposed in this paper, the following results are worth presenting. All the Definitions, Lemmas and Theorems are basically the results presented in [13], [4] and [2] for system identification and passivation.

Let consider the linear time-varying system $[C(t), A(t)]$ defined by

$$\dot{\mathbf{x}}(t) = A(t)\,x(t)\,, y(t) = C(t)\,x(t) \tag{1}$$

(1) Universidad Politecnica de Victoria. Seccion Mecatronica. Av. Nuevas Tecnologías S/N.parque Cientfico y Tecnologico TECNOTAM, Km. 5.5 carretera Victoria-Soto la Marina, 87137, México, rmirandac@upv.edu.mx, mortizm@upv.edu.mx, (2)Department of Automatic Control, Center for Research and Advanced Studies (CINVESTAV) Zacatenco, México D.F. C.P. 57000, México garrido@ctrl.cinvestav.mx

where $\mathbf{x}(t) \in \mathbb{R}^n$, $y(t) \in \mathbb{R}^m$, while $A(t) \in \mathbb{R}^{n\times n}$, $C(t) \in \mathbb{R}^{m\times n}$, are piecewise continuous functions.

Definition 1: (Uniform Complete Observability, UCO [13]) The system $[C, A]$ is called uniformly completely observable (UCO) if there exist strictly positive constants β_1, β_2, δ, such that, for all $t_0 \geq 0$: $\beta_1 I \leq N(t_0, t_0+\delta) \leq \beta_2 I$, where $N(t_0, t_0+\delta) \in \mathbb{R}^{n\times n}$ is the so-called observability Grammian: $N(t_0, t_0+\delta) = \int_{t_0}^{t_0+\delta} \Phi^T(\tau, t_0) C^T(\tau) C(\tau) \Phi(\tau, t_0)\, d\tau$, with $\Phi(t, t_0)$ being the state transition matrix.

Lemma 1: (UCO under output injection [13]) Assume that, for all $\delta > 0$, there exists $k_\delta > 0$ such that, for all $t_0 \geq 0$: $\int_{t_0}^{t_0+\delta} \|K(\tau)\|^2 d\tau \leq k_\delta$. Then, the system $[C, A]$ is UCO if and only if $[C, A+KC]$ is UCO. Moreover, if the observability Grammian of the system $[C, A]$ satisfies the UCO condition, then, the observability Grammian of the system $[C, A+KC]$ satisfies the inequalities with identical δ and $\beta_1' = \beta_1 / \left(1+\sqrt{k_\delta \beta_2}\right)^2$, $\beta_2' = \beta_2 \exp(k_\delta \beta_2)$.

Theorem 2: ([13]) Assume that $f(t, \mathbf{x}) : \mathbb{R}^+ \times \mathbb{R}^n \to \mathbb{R}^n$ has continuous and bounded first partial derivatives in $\mathbf{x}$ and is piecewise continuous in t for all $\mathbf{x} \in B_h$ (a ball of radius h centered at 0 in $\mathbb{R}^n$), $t \geq 0$. Then, the following statements are equivalent

1) $\mathbf{x} = 0$ is an exponentially stable equilibrium point of
$$\dot{\mathbf{x}} = f(t, \mathbf{x}), \mathbf{x}(t_0) = \mathbf{x}_0 \tag{2}$$
2) There exists a funtion $V(t, \mathbf{x})$ and some strictly positive constants h', α_1, α_2, α_3, α_4, such that, for all $\mathbf{x} \in B_h$, $t \geq 0$: (i) $\alpha_1 \|\mathbf{x}\|^2 \leq V(t, \mathbf{x}) \leq \alpha_2 \|\mathbf{x}\|^2$, (ii) $dV(t, \mathbf{x})/dt|_{(2)} \leq -\alpha_3 \|\mathbf{x}\|^2$ and (iii) $|\partial V(t, \mathbf{x})/\partial \mathbf{x}| \leq \alpha_4 \|\mathbf{x}\|$

Theorem 3: ([13]) If there exists a function $V(t, \mathbf{x})$ and strictly positive constants α_1, α_2, α_3 and δ, such that for all $\mathbf{x} \in B_h$, $t \geq 0$ the contidions (i), (ii) and (iii) of Theorem 2 hold, then $\mathbf{x}(t)$ converges exponentially to zero.

Theorem 4: ([1]) The state-space equation $[A, b, C, d]$ is a minimal realization of a proper rational function $\hat{g}(s)$ if and only if (A, b) is controllable, (A, C) is observable or if and only if $\dim(A) = \deg(\hat{g}(s))$, where $\hat{g}(s) = N(s)/D(s)$ and $\deg(\hat{g}(s)) = \deg(D(s))$.

In the next definitions, let consider the system Π defined as $\Pi : \dot{x}(t) = f(x, u), x(0) = x_0 \in \mathbb{R}^n, y(t) = H(x, u)$, where $\mathbf{x} \in \mathbb{R}^n$ is the state vector, $u \in \mathbb{R}^n$ the input and $y \in \mathbb{R}^m$ the system output. Consider the set Ξ of $n-$dimensional real valued functions $f(t) : \mathbb{R}^+ \to \mathbb{R}^n$ and define the set $L_2 \triangleq \left\{x \in \Xi : \|f\|_2^2 \triangleq \int_0^\infty \|f(t)\|^2 dt < \infty\right\}$, with $\|\cdot\|$ the Euclidean norm. This set constitutes a normed vector space with the field $\mathbb{R}$ and norm $\|\cdot\|_2$. Let introduce the extended space L_{2e} as $L_{2e} \triangleq \left\{x \in \Xi : \|f\|_{2T}^2 \triangleq \int_0^T \|f(t)\|^2 dt < \infty, \forall T\right\}$, where $L_2 \subset L_{2e}$. In the same way, let introduce the inner product and the truncated inner product of functions u and y as $(u, y) \triangleq \int_0^\infty u(t)^T y(t)\, dt, (u, y)_T \triangleq \int_0^T u(t)^T y(t)\, dt$.

Definition 2: (Dissipativity, [2]) The system Π is dissipative with respect to the supply rate $w(u, y) : \mathbb{R}^m \times \mathbb{R}^m \to \mathbb{R}$ if and only if there exists a storage function $H : \mathbb{R}^n \to \mathbb{R}_{\geq 0}$, such that $H(x(T)) \leq H(x(0)) + \int_0^T w(u(t), y(t))\, dt$ for all $u(t)$, $T \geq 0$ and all $x_0 \in \mathbb{R}^n$.

Definition 3: (Passivity, [2]) The system Π is passive if its supply rate is given by $\omega(u, y) = u^T y$. It is input strictly passive (ISP) if there exists a positive constant δ_i such that the supply rate can be expressed as $\omega(u, y) = u^T y - \delta_i \|u\|^2$, $\delta_i > 0$. Finally, it is output strictly passive (OSP) if there exists a positive constant δ_0 such that the supply rate can be expressed as $\omega(u, y) = u^T y - \delta_0 \|u\|^2$, $\delta_0 > 0$.

Definition 4: (L_2 stability, [2]) The system Π is called L_2 finite gain stable if there exists a positive constant γ such that for any initial condition $\mathbf{x}_0$ there exists a finite constant $\beta(\mathbf{x}_0)$ such that $\|y\|_{2T} \leq \gamma \|u\|_{2T} + \beta(\mathbf{x}_0)$.

Proposition 5: (OSP implies L_2 stability, [2]) If $\Sigma : u \to y$ is OSP, then it is L_2 stable.

Definition 5: (Zero state Observability, [2]) A state space system $\dot{x}(t) = f(x)$, $x \in \mathbb{R}^n$, is zero state observable from the output $y(t) = h(x)$ if for all initial conditions $x(0) \in \mathbb{R}^n$ we have $y(t) \equiv 0 \Longrightarrow x(t) \equiv 0$. It is zero state detectable if $y(t) \equiv 0$ implies that $\lim x(t) = 0$ as $t \to \infty$.

Definition 6: (Persistency of excitation, PE [13]) A vector $\phi : \mathbb{R}^+ \to \mathbb{R}^{2n}$ is persistently exciting (PE) if there exist constants $\{\alpha_1, \alpha_2, \delta\} > 0$ such that
$$\alpha_1 I \leq \int_{t_0}^{t_0+\delta} \phi(\tau) \phi^T(\tau)\, d\tau \leq \alpha_2 I \qquad \forall t_0 \geq 0 \tag{3}$$

Lemma 6: (PE trough a LTI filter, [13]) Let $w : \mathbb{R}^+ \to \mathbb{R}^{2n}$. If w is PE, the signals $w, \dot{w}$ belongs to the space L_∞, and H is a rational stable strictly proper minimum phase transfer function, then $H(w)$ is PE.

Theorem 7: (Small Signal I/O Stability, [13]) Consider the perturbed system $\dot{\mathbf{x}} = f(t, \mathbf{x}, u)$, $\mathbf{x}(0) = \mathbf{x}_0$ and the unperturbed system $\dot{\mathbf{x}} = f(t, \mathbf{x}, 0)$, $\mathbf{x}(0) = \mathbf{x}_0$, where $t \geq 0$, $\mathbf{x} \in \mathbb{R}^n$ and $u \in \mathbb{R}^m$. Let $\mathbf{x} = 0$ be an equilibrium point of the unperturbed system. Let f be piecewise continuous in t and have continuous and bounded first partial derivatives in $\mathbf{x}$ for all $t \geq 0$, $\mathbf{x} \in B_h$, $u \in B_c$. Let f be Lipschitz in u, with Lipschitz constant l_u, for all $t \geq 0$, $\mathbf{x} \in B_h$, $u \in B_c$. Let $u \in L_\infty$. If $\mathbf{x} = 0$ is an exponentially stable equilibrium point of the unperturbed system, then

1) The perturbed system is small-signal L_∞ stable, i.e., there exist γ_∞, $c_\infty > 0$, such that $\|u\|_\infty < c_\infty$ implies that
$$\|\mathbf{x}\|_\infty \leq \gamma_\infty \|u\|_\infty < h \tag{4}$$
where $\mathbf{x}$ is the solution of $f(t, \mathbf{x}, u)$ starting at $\mathbf{x}_0 = 0$ and γ_∞ is positive.
2) There exists $m \geq 1$ such that, for all $\|\mathbf{x}_0\| < h/m, < \|u\|_\infty < c_\infty$ implies that $\mathbf{x}(t)$ converges to a ball B_δ of radius $\delta = \gamma_\infty \|u\|_\infty < h$, i.e., for all bounded $\varphi > 0$, there exists $T \geq 0$ such that
$$\|\mathbf{x}(t)\| \leq (1+\varphi)\delta \tag{5}$$
for all $t \geq T$, along the solutions of $f(t, \mathbf{x}, u)$ starting at $\mathbf{x}_0$. Also for $t \geq 0$, $\|\mathbf{x}(t)\| < h$.

III. General model description

This paper deals with closed-loop identification of a perturbed DC servomechanism whose mathematical description is given by

$$J\ddot{q}(t) + f\dot{q}(t) = ku(t) + \nu_1(t) = \tau(t) + \nu_1(t) \qquad (6)$$

where J, f, k, u, v_1 and τ are the inertia, viscous friction coefficient, amplifier gain, input voltage, perturbation signal and torque input, respectively. Model (6) assumes that the amplifier works in current mode. Note that model (6) can be rewritten as

$$\ddot{q}(t) = -a\dot{q}(t) + bu(t) + \nu(t) \qquad (7)$$

where $a = f/J$, $b = k/J$ are positive constants and $\nu = \nu_1/J$. It is assumed that the perturbation signal is bounded, i.e., $\|v_1(t)\| \leq \beta, \beta \in \mathbb{R}^+$. The next paragraphs will show how, even in the presence of the perturbation signal $\nu(t)$, it can be ensured that closed-loop identification of (7) leads to a region Ω_δ where the parameter estimates belong to, and that such a region can be made arbitrarily small if a high gain PD controller is employed for closing the loop.

IV. Closed-Loop identification algorithm: non perturbed case

A. Stability analysis

In order to perform the closed-loop identification of (7), it will be considered a similar procedure to that presented in [8]. To this end, as a first step we consider the case when there is not a perturbation signal, i.e., $\nu(t) \equiv 0$, leading to the unperturbed servo model $\ddot{q}(t) = -a\dot{q}(t) + bu(t)$.

The block diagram for the closed-loop identification procedure is depicted in Fig. 1. The method consists of closing the loop of the servomechanism and its model by using a PD controller, where the same gains are used for both PD controllers. Then, the output error $\epsilon(t) \triangleq q(t) - q_e(t)$ and its time derivative are employed to feed an identification algorithm which estimates the system parameters and updates

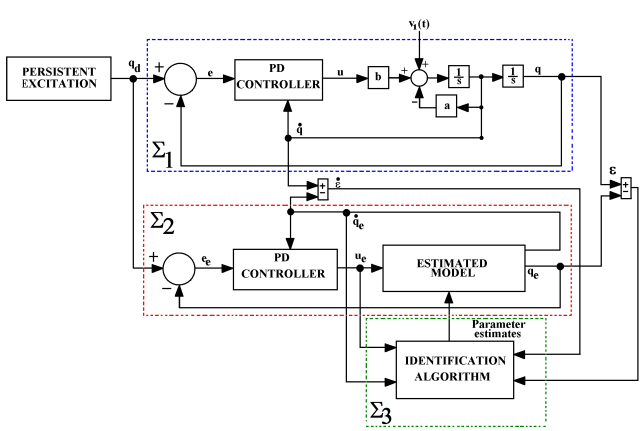

Fig. 1. Block diagram for the closed-identifcation algorithm.

them in the estimated model. All this procedure is now theoretically summarized.

For closing the loop around the unperturbed system let us consider the PD controller $u(t) = k_p e(t) - k_d\dot{q}(t)$, with $e(t) = q_d(t) - q(t)$ the tracking error signal, $q_d(t)$ the reference signal and $k_p > 0$, $k_d > 0$ the proportional and derivative controller gains. Then, the unperturbed system in closed loop with $u(t)$ leads to the closed-loop dynamics

$$\Sigma_1 : \ddot{q}(t) = -(a + bk_d)\dot{q}(t) + bk_p e(t) \qquad (8)$$

It is not difficult to prove, by using the Routh Hurwitz criterion, that the control law $u(t)$ stabilizes the unperturbed servo model. Now consider the unperturbed estimated model $\ddot{q}_e(t) = -\hat{a}\dot{q}_e(t) + \hat{b}u_e(t)$ and the PD controller $u_e(t) = k_p e_e(t) - k_d\dot{q}_e(t)$, where $e_e(t) = q_d(t) - q_e(t)$ is the tracking error for the unperturbed estimated model. Then, the unperturbed estimated model in closed loop with $u_e(t)$ leads to the closed-loop dynamics

$$\Sigma_2 : \ddot{q}_e(t) = -\left(\hat{a} + \hat{b}k_d\right)\dot{q}_e(t) + \hat{b}k_p e_e(t) \qquad (9)$$

Note that the same gains are used for both controllers $u(t)$ and $u_e(t)$. However, even when the real servomechanism (8) is stable, the same conclusion cannot be drawn for its model (9), because it has time varying coefficients, making then necessary to analize its stability. From the definition of $\epsilon(t)$, it is possible to evaluate its second time derivative and employing (8) and (9), the error dynamics is stablished as follows

$$\ddot{\epsilon}(t) + c\dot{\epsilon}(t) + bk_p\epsilon(t) = \tilde{\theta}^T\phi(t) \qquad (10)$$

with $c \triangleq (a + bk_d) > 0$ and $\tilde{\theta}(t)$, $\phi(t)$ being the parameter error and the regressor vector respectively defined as $\tilde{\theta} \triangleq \hat{\theta} - \theta = \left(\hat{a} - a, \hat{b} - b\right)^T$, $\phi(t) \triangleq (\dot{q}_e, -u_e)^T$. In order to analyze the behaviour of the signals involved in the error dynamics (10), passivity based arguments [2] will be used. To this end, let $\mathbf{x} = [\epsilon, \dot{\epsilon}]^T$ be the state vector and consider the following storage function

$$H_1(\mathbf{x}) = \frac{1}{2}\mathbf{x}^T \begin{bmatrix} bk_p & \mu \\ \mu & 1 \end{bmatrix} \mathbf{x} = \mathbf{x}^T M \mathbf{x}$$

where $\mu \in \mathbb{R}^+$. It is easy to show that H_1 will be possitive definite if $\mu < \sqrt{bk_p}$. Besides, after some straigthforward steps it is possible to conclude that if $\mu < \min\{c/2, 2bk_p/c\}$, then the time derivative of H_1 along the trajectories of (10) yields $\dot{H}_1(\epsilon, \dot{\epsilon}) \leq \tilde{\theta}^T\phi(\mu\epsilon + \dot{\epsilon}) - \frac{c}{2}(\mu\epsilon + \dot{\epsilon})^2$, i.e., (10) defines an OSP operator $\tilde{\theta}^T\phi \rightarrow (\mu\epsilon + \dot{\epsilon})$. Moreover, it is well known that the feedback interconection of passive subsystems is passive, thus making intuitive to consider the parameter error dynamics as follows: Σ_3 : $\dot{\tilde{\theta}} = -\Gamma\phi(\mu\epsilon + \dot{\epsilon})$, with $\Gamma = \Gamma^T$ a constant positive definite matrix. Then, by considering the storage function $H_2\left(\tilde{\theta}\right) = \tilde{\theta}^T\Gamma^{-1}\tilde{\theta}/2$ it is easy to conclude that Σ_3 defines a passive operator $(\mu\epsilon + \dot{\epsilon}) \rightarrow -\tilde{\theta}^T\phi$. Finally, let consider the feedback interconection of (10) with Σ_3 given by

$$\Sigma\left\{ \ \ddot{\epsilon}(t) + c\dot{\epsilon}(t) + bk_p\epsilon(t) = \tilde{\theta}^T\phi(t), \dot{\tilde{\theta}} = -\Gamma\phi(\mu\epsilon + \dot{\epsilon}) \right. \qquad (11)$$

then, by considering the storage function for (11) as the sum of H_1 and H_2, it is easy to prove that Σ is still OSP, thus, according to Proposition 5, it follows that $(\mu\epsilon + \dot{\epsilon}) \in L_2$. Let define $y(t) = (\mu\epsilon + \dot{\epsilon})$ as the output for the interconnected system (11). Then, note that $\epsilon(t)$ corresponds to the output of an exponentially stable filter whose input belongs to the L_2 space, therefore $\epsilon(t) \to 0$ as $t \to \infty$ [12].

Until now it has been proven that $q(t) \in L_\infty$ and that $\epsilon(t) \to 0$ as $t \to \infty$, therefore, $q_e(t) \to q(t)$ as $t \to \infty$, i.e., $q_e(t) \in L_\infty$, therefore, the system (9) is stable, as desired. It is left to prove that indeed $\tilde{\theta}(t) \to 0$. To this end, consider the state-space description of (10) as

$$\dot{\mathbf{x}} = A\mathbf{x} + BU, y(t) = C\mathbf{x} \tag{12}$$

with

$$A = \begin{bmatrix} 0 & 1 \\ -bk_p & -c \end{bmatrix}, B = \begin{bmatrix} 0 \\ 1 \end{bmatrix}, C^T = \begin{bmatrix} \mu \\ 1 \end{bmatrix}, U = \tilde{\theta}^T\phi$$

where $\mathbf{x}^T = (\epsilon, \dot{\epsilon})$ is the state vector. In order to prove that $\tilde{\theta}(t)$ converges to zero, it is enough to prove that the regressor vector $\phi(t)$ is Persistently Exciting (PE) as pointed out in [13]. Unfortunately, for this case the regressor vector $\phi(t)$ has signals from the estimated model (9), which is a time varying system. To overcome this technical difficulty let consider the regresor vector $\phi_r^T(t) = (\dot{q}, -u)^T$ wich consists of signals from the real servomechanism (8). By considering the same ideas as [13] it is not a difficult task to show that if $c > \mu$, then, $\phi_r(t)$ will be PE (see also [8]). Now, let consider the difference $\phi_r - \phi = (\dot{\epsilon}, k_d\dot{\epsilon} + k_p\epsilon)^T$ and consider the Lyapunov function candidate $V_1 = H_1 + H_2$. Clearly $V_1 > 0$ if $\mu < \sqrt{bk_p}$ and it is easy to show that $\dot{V}_1 \leq -\beta\epsilon^2, \beta \triangleq \frac{2}{\alpha}\left(\mu bk_p\alpha/2 - \mu^2c^2/8\right)$, with $\alpha \triangleq (c - \mu) > 0$. Therefore, if $\mu \leq 4bk_pc/\left(4bk_p + c^2\right)$ then $\epsilon(t) \in L_2$, and considering the fact that $y(t) = (\mu\epsilon + \dot{\epsilon}) \in L_2$ permits concluding $\dot{\epsilon}(t) \in L_2$, which makes clear that $(\phi_r - \phi) \in L_2$. Now, given a PE signal $\omega(t)$ and a signal $z(t) \in L_2$, the sum $(\omega + z)$ is still PE [13]. Thus, $\phi = \phi_r - (\phi_r - \phi)$ is PE as desired and the convergence of $\tilde{\theta}(t)$ to zero can be claimed, i.e., the estimated parameters do converge to the real ones. Based on the above results, the following proposition follows.

Proposition 8: Let the system (8) and assume that $\mu < \min\left\{\sqrt{bk_p}, c/2, 2bk_p/c, 4bk_pc/\left(4bk_p + c^2\right)\right\}$. Then $\left\{\epsilon, \dot{\epsilon}, \tilde{\theta}\right\} \to 0$ as $t \to \infty$.

As we can see from the results presented above, it has been proved the parameter convergence of the identification algorithm. However, the convergence is asymptotic. Then, in order to make the algorithm robust when there exist disturbances, it is important to ensure the exponential convergence of all the system signals, which is the aim of the next section.

B. Exponential Convergence

When dealing with system identification, an important issue is the robustness of the identification algorithm in presence of external perturbations or unmodeled dynamics. Thus, it is not enough to guarantee that the parameter error approaches to zero, but also to ensure that the overall system will be exponentially stable. Therefore, it is important to show under which conditions the system (11) is indeed exponentially stable.

Let consider the state space description given by (12), then the system (A, B, C) is observable and controllable, i.e., it is a minimal realization, if $\mu < c/2$. Let consider the systems

$$\Sigma_4 : \begin{cases} \dot{\tilde{\theta}} = 0 \\ y_2 = \phi^T(t)\tilde{\theta}(t) \end{cases}, \Sigma_5 : \begin{cases} \dot{\tilde{\theta}} = -\Gamma\phi(\mu\epsilon + \dot{\epsilon}) \\ y_2 = \phi^T(t)\tilde{\theta}(t) \end{cases} \tag{13}$$

The last analysis proved that $\phi(t)$ is PE, therefore Σ_4 is UCO and so do Σ_5 (see Definition 1 and Lemma 1). Then, the main result of this section can be stablished as follows.

Theorem 9: Let the system (12) and assume that μ satisfies the inequality given in Proposition 8. Let $\bar{\mathbf{w}} = \left(\bar{\mathbf{x}}, \bar{\tilde{\theta}}\right)$ be an equilibrium point of (12). Then $\bar{\mathbf{w}}$ is an exponentially stable equilibrium point.

Proof: In order to prove exponential stability, Theorem 3 will be used. Let consider the Lyapunov function candidate $V_2(\mathbf{w}(t)) = H_2\left(\tilde{\theta}(t)\right) + H_3(\mathbf{x}(t))$, where $\mathbf{w}(t) = \left[\mathbf{x}(t), \tilde{\theta}(t)\right]^T = \left[\epsilon, \dot{\epsilon}, \tilde{\theta}\right]^T$ and

$$H_3(\mathbf{x}(t)) = \frac{1}{2}\mathbf{x}^T M_2\mathbf{x}, M_2 = \begin{bmatrix} bk_p + \mu c & \mu \\ \mu & 1 \end{bmatrix} \tag{14}$$

with $H_2\left(\tilde{\theta}(t)\right) = \tilde{\theta}^T\Gamma^{-1}\tilde{\theta}/2$. Function $H_3 > 0$ if the inequality $\mu < \left(c + \sqrt{c^2 + 4bkp}\right)/2$ holds. Besides, it is possible to show that $\frac{1}{2}\lambda_{\min}(M_2)\|\mathbf{x}\|^2 + \frac{1}{2}\lambda_{\min}(\Gamma)\left\|\tilde{\theta}\right\|^2 \leq V_2(\mathbf{w}) \leq \frac{1}{2}\lambda_{\max}(M_2)\|\mathbf{x}\|^2 + \frac{1}{2}\lambda_{\max}(\Gamma)\left\|\tilde{\theta}\right\|^2$. By taking the time derivative of V_2 along the trajectories of (11) and defining the diagonal matrix $Q = \text{diag}\{\mu bk_p, c - \mu\}$, we get

$$\dot{V}_2 \leq -\mathbf{x}^T Q\mathbf{x} \leq 0 \tag{15}$$

where $Q = Q^T > 0$ if $\mu < c$. In order to prove exponential stability it is then necessary to prove that there exist strictly positive constants α_3, δ such that

$$\int_t^{t+\delta} \frac{d}{d\tau}V_2(\mathbf{w}(\tau))\Big|_{(12)} d\tau \leq -\alpha_3\|\mathbf{w}(t)\|^2 \tag{16}$$

First note from (12) and (15) that

$$\int_t^{t+\delta} \frac{d}{d\tau}V_2(\mathbf{w}(\tau))\Big|_{(12)} \leq -\frac{\lambda_{\min}(Q)}{\mu^2 + 1}\int_t^{t+\delta} |y(\tau)|^2 d\tau$$

then, (16) will be valid if for $\alpha_3 > 0$ the inequality $\frac{\lambda_{\min}(Q)}{\mu^2+1}\int_{t_0}^{t_0+\delta} |y(\tau)|^2 d\tau \geq \alpha_3\left(\|\mathbf{x}(t_0)\|^2 + \left\|\tilde{\theta}(t_0)\right\|^2\right)$ holds for all $t_0 \geq 0$ and $\mathbf{w}(t_0)$. Now consider the following system

$$\dot{\mathbf{x}} = A\mathbf{x} + BU, U = \tilde{\theta}^T\phi, \dot{\tilde{\theta}} = 0, y = C\mathbf{x} \tag{17}$$

Let $K = -\Gamma(\mu\epsilon + \dot{\epsilon})$ and consider the UCO property of Σ_5 with that K value. It is clear that the condition on K from Lemma 1 holds with $k_\delta = \int_{t_0}^{t_0+\delta} \Gamma^T(\mu\epsilon + \dot{\epsilon})^2 \Gamma d\tau \leq$

$\int_{t_0}^{t_0+\delta} \lambda_{\max}^2(\Gamma)(\mu\epsilon+\dot{\epsilon})^2 d\tau$ and from section IV we know that $(\mu\epsilon+\dot{\epsilon}) \in L_2$, thus, there exists a positive constant $\kappa > 0$ such that $k_\delta \leq \kappa\lambda_{\max}^2(\Gamma)$. Note also that $y(t) = C^T e^{A(t-t_0)}\mathbf{x}(t_0) + \int_{t_0}^{t} C^T e^{A(t-\tau)} B\phi(\tau) d\tau \tilde{\theta}(t_0)$ because from (17) the vector $\tilde{\theta}$ is a constant. Let define z_1 and z_2 as $z_1 \triangleq C^T e^{A(t-t_0)}\mathbf{x}(t_0)$, $z_2 \triangleq \int_{t_0}^{t} C^T e^{A(t-\tau)} B\phi(\tau) d\tau \tilde{\theta}(t_0)$. From the stability analysis of Section IV it was concluded that $\left\{\phi(t), \dot{\phi}(t)\right\} \in L_\infty$, and that $\phi(t)$ is PE. Hence, from Lemma 6 it is clear that $\phi_f(t) \triangleq \int_{t_0}^{t} C^T e^{A(t-\tau)} B\phi(\tau) d\tau$ is PE, therefore, there exist positive constants α_1, α_2, σ such that $\alpha_1 \left\|\tilde{\theta}(t_0)\right\|^2 \leq \int_{t_1}^{t_1+\sigma} z_2^2(\tau) d\tau \leq \alpha_2 \left\|\tilde{\theta}(t_0)\right\|^2$ for all $t_1 \geq t_0 \geq 0$ and $\tilde{\theta}(t_0)$. Moreover, because A is Hurwitz stable there exist positive constants γ_1, γ_2 such that $\int_{t_0+m\sigma}^{\infty} z_1^2(\tau) d\tau \leq \gamma_1 \|\mathbf{x}(t_0)\|^2 e^{-\gamma_2 m\sigma}$ for all $t_0 \geq 0$, $\mathbf{x}(t_0)$ and an integer $m > 0$ to be defined later. Since (A, C) is observable, then, there exists $\gamma_3(m\sigma) > 0$ with $\gamma_3(m\sigma)$ increasing such that $\int_{t_0}^{t_0+m\sigma} z_1^2(\tau) d\tau \geq \gamma_3(m\sigma)\|\mathbf{x}(t_0)\|^2$ for all $t_0 \geq 0$, $\mathbf{x}(t_0)$ and $m > 0$. Let $n > 0$ be another integer to be defined later and $\delta = (m+n)\sigma$. From the triangle inequality

$$\begin{aligned}\int_{t_0}^{t_0+\delta} |y(\tau)|^2 d\tau \geq \|\mathbf{x}(t_0)\|^2 \left[\gamma_3(m\sigma) - \gamma_1 e^{-\gamma_2 m\sigma}\right] \\ + \left\|\tilde{\theta}(t_0)\right\|^2 (n\alpha_1 - m\alpha_2)\end{aligned}$$

Let both m and n be such that $\gamma_3(m\sigma) - \gamma_1 e^{-\gamma_2 m\sigma} \geq \frac{\gamma_3(m\sigma)}{2} > 0$ and $n\alpha_1 - m\alpha_2 \geq \alpha_1 > 0$, then, $\int_{t_0}^{t_0+\delta} |y(\tau)|^2 d\tau \geq \frac{\gamma_3(m\sigma)}{2}\|\mathbf{x}(t_0)\|^2 + \alpha_1 \left\|\tilde{\theta}(t_0)\right\|^2$. Similarly we have that

$$\begin{aligned}\int_{t_0}^{t_0+\delta} |y(\tau)|^2 d\tau \leq 2\gamma_1 \|\mathbf{x}(t_0)\|^2 e^{-\gamma_2 m\sigma} \\ +2(m+n)\alpha_2 \left\|\tilde{\theta}(t_0)\right\|^2\end{aligned}$$

Let define $\beta_1 \triangleq \min\left(\alpha_1, \frac{\gamma_3(m\sigma)}{2}\right)$, $\beta_2 \triangleq \max(2\gamma_1, 2(m+n)\alpha_2)$, then, it is possible to obtain

$$\begin{aligned}\beta_1\left(\|\mathbf{x}(t_0)\|^2 + \left\|\tilde{\theta}(t_0)\right\|^2\right) \leq \int_{t_0}^{t_0+\delta} \|y(\tau)\|^2 d\tau \\ \leq \beta_2\left(\|\mathbf{x}(t_0)\|^2 + \left\|\tilde{\theta}(t_0)\right\|^2\right)\end{aligned} \tag{18}$$

therefore

$$\begin{aligned}\int_{t}^{t+\delta} \frac{d}{d\tau} V_2(\mathbf{w}(\tau))\Big|_{(12)} \leq \\ -\frac{\lambda_{\min}(Q)}{\mu^2+1}\beta_1\left(\|\mathbf{x}(t_0)\|^2 + \left\|\tilde{\theta}(t_0)\right\|^2\right) \leq -\alpha_3\|\mathbf{w}_0\|\end{aligned} \tag{19}$$

where $\alpha_1 = \frac{1}{2}\min(\lambda_{\min}(M_2), \lambda_{\min}(\Gamma))$, $\alpha_2 = \frac{1}{2}\max(\lambda_{\max}(M_2), \lambda_{\max}(\Gamma))$ and $\alpha_3 = \frac{\lambda_{\min}(Q)}{\mu^2+1}\min\left(\alpha_1, \frac{\gamma_3(m\sigma)}{2}\right) > 0$. Then, the system (11) is exponentially stable. ■

Now it has been proved the exponential stability for the system (11) in the non perturbed case. However, in practical applications it is well known that there will be some disturbances that will appear, such as unmodelled dynamics or noise from the enviroment or the measuring devices, which makes neccessary to extend the analysis to the perturbed case, as described in the next Section.

V. Closed-Loop identification algorithm: Perturbed Case

The last section proved that the unperturbed system (11) is exponentially stable. Now, it will be proved that such a system obtained with the perturbed system (7) in closed loop with the PD controller $u(t)$ is L_∞ stable. Let consider the system (7) in closed loop with $u(t)$, the system Σ_2 and the output error $\epsilon(t)$ defined as before. Then, it is possible to obtain the following error dynamics

$$\ddot{\epsilon}(t) = -c\dot{\epsilon}(t) - bk_p\epsilon(t) + \tilde{\theta}^T\phi(t) + \nu(t) \tag{20}$$

It is important to know if the perturbed system (20) is still stable in presence of the perturbation signal $\nu(t)$. If it is the case, then the system will be robust even in the presence of perturbations, wich is desirable in identification context because reliable parameter estimates can be obtained even in the perturbed case. The next result obtained from [13] allow us conclude that the perturbed system (20) is L_∞ stable.

Theorem 10: Consider the perturbed system (20) and the unperturbed system (10). If the equilibrium $\mathbf{w}_0$ of (10) is exponentially stable, then: (i) The perturbed system (20) is small signal L_∞-stable, that is, there exists γ_∞ such that $\|\mathbf{w}(t)\| \leq \gamma_\infty\beta < h$, where $\mathbf{w}(t)$ is the solution of (20) starting at $\mathbf{w}_0$; (ii) There exists $m \geq 1$ such that $\|\mathbf{w}_0\| < h/m$ implies that $\mathbf{w}(t)$ converges to a ball Ω_δ of radius $\delta = \gamma_\infty\beta < h$, that is: for all $\varepsilon > 0$ there exists $T \geq 0$ such that $\|\mathbf{w}(t)\| \leq \delta(1+\varepsilon)$ for all $t \geq T$, along the solutions of (20) starting at $\mathbf{w}_0$. Also for all $t \geq 0$, $\|\mathbf{w}_0\| < h$.

Proof: Consider again the Lyapunov function $V_2(\mathbf{w}(t))$. Assuming that inequalities of μ from Proposition 8 hold, it is posible to obtain $\dot{V}_2 \leq -\lambda_{\min}(Q)\|\mathbf{w}\|^2 + \beta\sqrt{\mu^2+1}\|\mathbf{w}\|$. Let define the constants $\bar{\alpha}_3 \triangleq \lambda_{\min}(Q)$, $\alpha_4 \triangleq \sqrt{\mu^2+1}$, $\gamma_\infty \triangleq \alpha_4\sqrt{(\alpha_2/\alpha_1)}/\bar{\alpha}_3$, $\delta \triangleq \gamma_\infty\beta$, $m \triangleq \sqrt{\alpha_2/\alpha_1} \geq 1$, then, the time derivative of V_2 along the trajectories of (20) yields $\dot{V}_2 \leq -\bar{\alpha}_3\|\mathbf{w}\|(\|\mathbf{w}\| - \delta/m)$ and two cases will be considered: (1) First we have to prove (i) of Theorem 10. To this end consider the case where $\|\mathbf{w}_0\| \leq \delta/m$. Note that $\delta/m \leq \delta$ because of $m \geq 1$, which implies that $\mathbf{w}(t) \in \Omega_\delta$ for all $t \geq 0$. Suppose that it is not true, then, by continuity of the solutions there exist T_0 and T_1, with $T_1 > T_0 \geq 0$ such that $\|\mathbf{w}(T_0)\| = \delta/m$, $\|\mathbf{w}(T_1)\| > \delta$ and for all $t \in [T_0, T_1]$ we have that $\|\mathbf{w}(t)\| \geq \delta/m$, then, from the bound $\dot{V}_2 \leq -\bar{\alpha}_3\|\mathbf{w}\|(\|\mathbf{w}\| - \delta/m)$ it is clear that in $[T_0, T_1]$ we get $\dot{V}_2 \leq 0$, but in this case: $V_2(T_0, \mathbf{w}(T_0)) \leq \alpha_2(\delta/m)^2 = \alpha_1\delta^2$ and $V_2(T_1, \mathbf{w}(T_1)) > \alpha_1\delta^2$, which is a contradiction, therefore, for all $\mathbf{w}(t)$ with initial condition $\mathbf{w}_0$, a solution for (20) remains on Ω_δ. (2) Second, assume that $\|\mathbf{w}_0\| > \delta/m$ and that for all $\varepsilon > 0$ there exist $T \geq 0$ such that $\|\mathbf{w}(t)\| \leq \delta(1+\varepsilon)/m$ and suppose that it is not true; then, for some $\varepsilon > 0$ and for all $t \geq 0$ we have that $\|\mathbf{w}(t)\| > \delta(1+\varepsilon)/m$ and from $\dot{V}_2 \leq -\bar{\alpha}_3\|\mathbf{w}\|(\|\mathbf{w}\| - \delta/m)$ we obtain $\dot{V}_2 \leq -\alpha_3\varepsilon(1+\varepsilon)(\delta/m)^2$ which is a strictly negative constant. However, this contradicts the fact that:

$V_2(0, \mathbf{w}_0) \leq \alpha_2 \|\mathbf{w}_0\|^2 < \alpha_2 h^2/m^2$ and $V_2(t, \mathbf{w}(t)) \geq 0$ for all $t \geq 0$, because the inequality must be strict.

On the other hand, let assume that for all $t \geq T$ the inequality $\|\mathbf{w}(t)\| \leq \delta(1+\varepsilon)$ holds, then, we can prove this afirmation in the same way that the first step of this proof. Thus, we conclude that $\mathbf{w}(t)$ converges to Ω_δ, as desired, and the proof is completed. ■

VI. Analysis of the Results

Note that from the stability proof of the perturbed system (20) we get the bound $\gamma_\infty \beta = ((\mu^2 + 1)\max(\lambda_{\max}(M_2), \lambda_{\max}(\Gamma)))^{1/2}\beta/((\lambda_{\min}(Q))^2 \min(\lambda_{\min}(M_2), \lambda_{\min}(\Gamma)))^{1/2}$. Then, the eigenvalues for M_2 are given by $s = \left(bk_p + \mu c + 1 \pm \sqrt{(bk_p + \mu c - 1)^2 + 4\mu^2}\right)/2$, so that $\lambda_{\min}(M_2) = (bk_p + \mu c + 1 - \sqrt{(bk_p + \mu c - 1)^2 + 4\mu^2})/2$, $\lambda_{\max}(M_2) = (bk_p + \mu c + 1 + \sqrt{(bk_p + \mu c - 1)^2 + 4\mu^2})/2$, $\lambda_{\min}(Q) = \min\{\mu b k_p, c - \mu\}$, $\lambda_{\max}(Q) = \max\{\mu b k_p, c - \mu\}$. In order to show the qualitative behavior of the region Ω_δ it is possible to get graphical results for different values of $\lambda_{\min}(Q)$, $\lambda_{\min}(\Gamma)$, $\lambda_{\max}(Q)$, $\lambda_{\max}(\Gamma)$, k_p, k_d and μ. Fig. 2 show the behaviour of region Ω_δ for different values of k_p and k_d and Fig. 3 show the same but for different values of $\lambda_{\min}(\Gamma)$ and $\lambda_{\max}(\Gamma)$. From the last equations and those figures it is possible to note that: (a) The region Ω_δ can be made arbitrarily small if the values for $\lambda_{\min}(Q)$ and $\min(\lambda_{\min}(M_2), \lambda_{\min}(\Gamma))$ are as large as posible. (b) The value for $\lambda_{\min}(Q)$ can be increased if the controller gains k_d and k_p have large values, which is the case if we use a high gain PD controller. (c) By increasing the value of k_p and k_d we increase the value of $\lambda_{\min}(M_2)$. (d) By increasing the values of the gain matrix Γ we increase the value of $\lambda_{\min}(\Gamma)$. (e) As it can be seen from Figures 2 and 3, the effect of the gain k_p is more important in order to reduce the size of the region Ω_δ, while the effect of the gain k_d does not have a significative effect. The effect of the gain k_d is almost imperceptible if the gain k_p is large enough. (f) If the values of the maximum or minimum eigenvalues for the gain matrix Γ dominate, the size of Ω_δ will be even smaller than that obtained in other circumstances. Therefore, for robustness of the identification algorithm, it is important not only the values of the controller gains, but also the value of the elements of the gain matrix Γ employed for the parameter update law. Region Ω_d is effectively reduced if a high gain k_p is employed, and also if Γ has large eigenvalues.

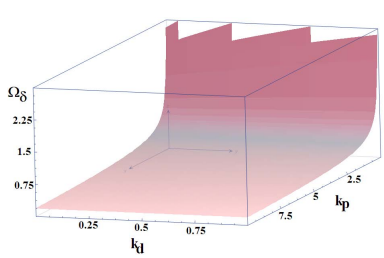

Fig. 2. Behavior of the region Ω_δ when the value of k_p and k_d are varied.

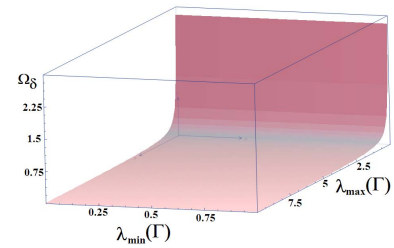

Fig. 3. Behavior of the region Ω_δ when the value of $\lambda_{min}(\Gamma)$ and $\lambda_{max}(\Gamma)$ are varied.

VII. Conclusion

This paper exposes a method for on-line identification of the parameters of a linear model of a servomechanism working in closed loop with a PD controller. An advantage of this configuration is that it allows freely choosing the excitation signal. Theoretical results show that when there is not perturbation signals the system is exponentially stable, while in the perturbed case the system is sill stable, making it robust in face of perturbation signals. Finally, it was shown that by increasing the controller and adaptation gains the region Ω_d, obtained in the perturbed case, can be arbitrarily reduced, which means that the accuracy of the parameter estimates can be increased, which gives some insight about the importance of the controller structure in the identification process.

References

[1] Chen, Y. Y., Huang, P. Y., Yen, J. Y., "Frequency domain identification algorithms for servo systems with friction", *IEEE Trans. Control Systems Technology*, Vol. 10 (5), 2002

[2] Ortega, R., Loria, A., Nicklasson, P. J., R., H. Sira, "Passivity-based Control of Euler-Lagrange Systems", Springer Verlag, London, Ltd., 1998

[3] G. Ellis. Control systems design guide. Second Edition. Academic Press, 2000.

[4] L. Ljung, "System Identification", Ed. Prentice Hall, 1987

[5] E. J. Adam, E.D. Guestrin, "Identification and robust control for an experimental servomotor", *ISA Transactions*, vol. 41, no. 2, pp. 225-234, 2002.

[6] T. Iwasaki, T. Sato, A. Morita, M. Maruyama, "Autotuning of two degree of freedom motor control for high accuracy trajectory motion", *Control Eng. Practice*, vol. 4, no. 4, pp.537-544, 1996.

[7] Y. Zhou, A. Han, S. Yan, X. Chen, "A fast method for online closed loop system identification", *The International Journal of Advanced Manufacturing Technology*, vol. 31, no. 1-2, pp. 78-84, 2006.

[8] Garrido, R., R, Miranda. Autotuning of a DC Servomechanism using Closed Loop Identification. IEEE 32nd Annual Conference on Industrial Electronics, IECON 2006. Paris, France, October 7-10, 2006.

[9] K. K. Tan, T.H. Lee, S.N. Huang, X. Jiang, "Friction modeling and adaptive compensation using a relay feedback approach", *IEEE Trans. on Industrial Electronics*, vol. 48, no.1, pp. 169-176,2001.

[10] A. Besançon-Voda, G. Besançon, "Analysis of a two-relay system configuration with application to Coulomb friction identification", *Automatica*, vol. 35, no. 8, pp. 1391-1399,1999.

[11] U. Forsell, L. Ljung, "Closed loop identification revisited", *Automatica*, vol. 35, no. 7, pp. 1215-1241, 1999.

[12] Desoer, C. A., Vidyasagar, M., "Feedback Systems: Input-Output Properties", Academic Press, New York, 1975

[13] Sastry, S., Bodson, M., "Adaptive Control: Stability, Convergence and Robustness", Englewood Cliffs, NJ: Prentice Hall, 1989